High Speed Hydraulic Cylinder with Open Center

F series

KITAGAWA standard thru-hole type

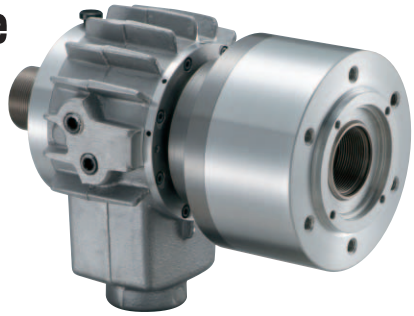

●Built-in check valve and relief valve

■ Dimensional Drawings

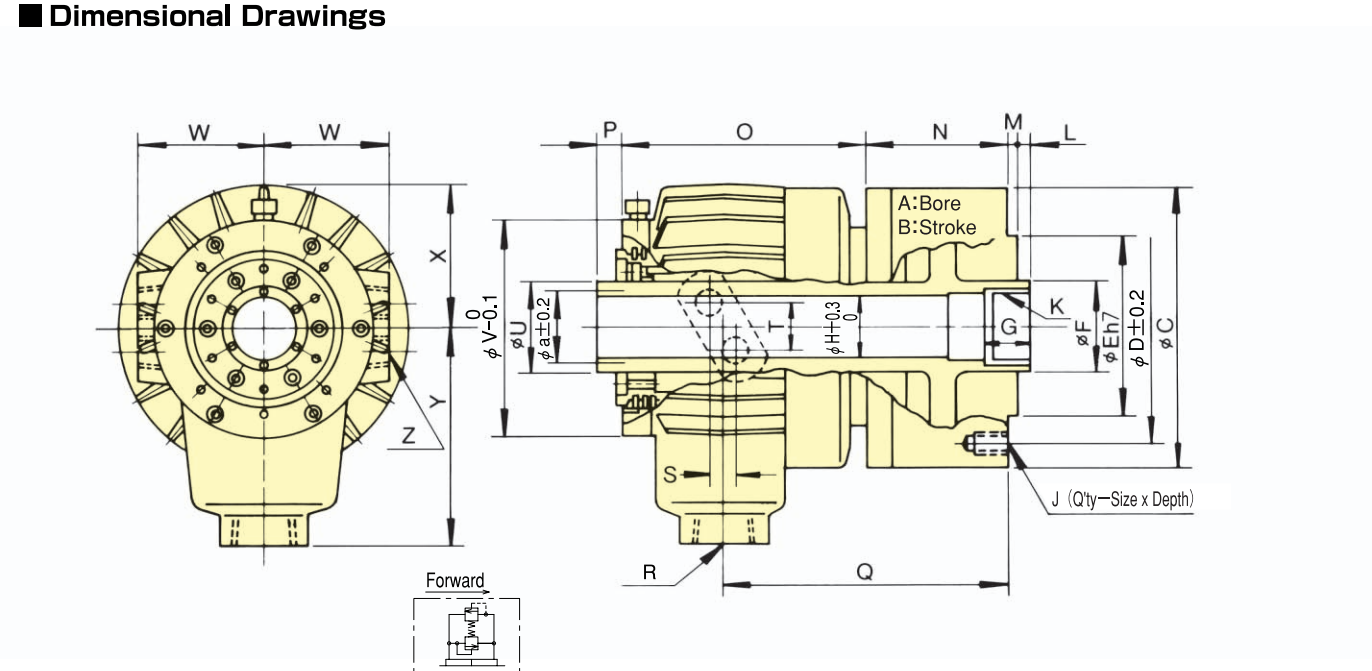

■ Dimensions

Model \ Dimensions	A	B	C	D	E (h7)	F	G	H	J	K	L max.	L min.	M	N	O	P max.	P min.	Q	R	S	T	U	V	W	X	Y	Z	a
F0933H	95	12	125	100	80	45	25	33.5	6-M 8×15	M 38×1.5	+7	−5	5	71	119	41	29	142	RC3/4	11.8	22	M39×1.5	104	64	66	110	2×2-RC1/4	−
F2511H	250	23	310	275	230	140	45	117.5	12-M 16×32	M 130×2.0	+18	−5	6	101	209	38	15	217	RC 1	27	20	134.6	232	125	135.5	215	2×2-PT3/8	127

■ Specifications

※Total leakage : Pressure 3.0MPa (30.6kgf/cm²) and oil temperature 50℃. ※Draw bar pull force : Pressure 4.0MPa (40.8kgf/cm²)

Model \ Specifications	Thru-Hole mm	Piston stroke mm	Piston Area Push Side cm²	Piston Area Pull Side cm²	Draw bar Push Side kN(kgf)	Draw bar Pull Side kN(kgf)	Max. Operation Pressure MPa (kgf/cm²)	Total leakage ℓ/min	Max. Speed min⁻¹ (r.p.m)	Net Weight kg	Moment of inertia kg·m²
F0933H	33	12	58	55	22.0 (2243)	20.6 (2100)	4 (40.8)	3.0	8000	8.5	0.008
F2511H	117.5	23	348	336	125.0 (12746)	120 (12236)	4 (40.8)	7.0	2800	60	0.455